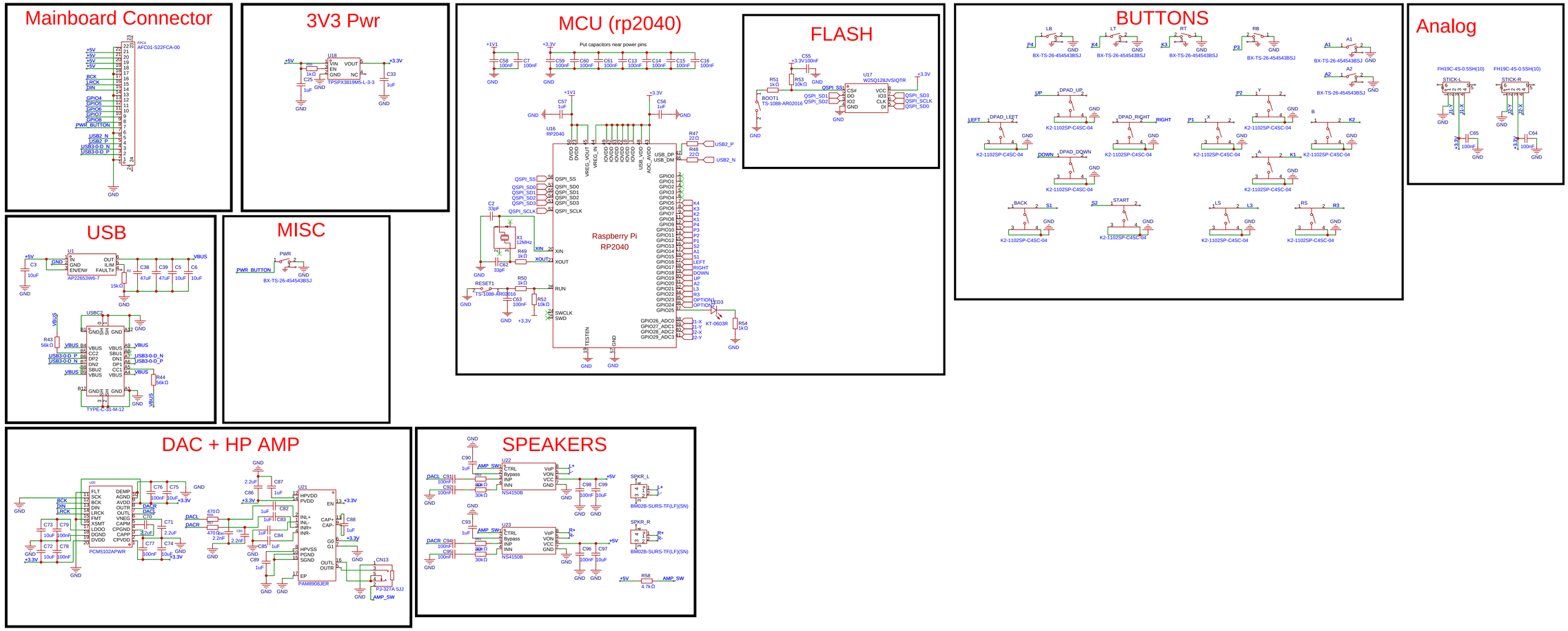

Schematic	Schematic1	Update Date	2026-01-25
		Create Date	2025-11-25
Page	P1	Part Number	
Drawn	DSBOARD		
Reviewed			
	VER	SIZE	PAGE 1 OF 1
EasyEDA	V1.0	A4	EasyEDA.com